Linde Material Handling

Three-wheel electric forklift

Xi10 – Xi20

Load capacity 1.0 t – 2.0 t | Series 1251

ION

Performance miracle on three wheels

- → Powerful electric counterbalance forklift truck up to 2 tonnes capacity with integrated Li-ION battery (Xi)
- → Powerful and productive due to 90 volt technology and synchronous reluctance motors
- → Exceptionally spacious operator's workspace designed to the highest ergonomic standards
- → Above-average lifting and lowering speeds
- → Compact three-wheel configuration with close-coupled steer axle for high levels of manoeuvrability
- → 6 models with different chassis and battery variants

TECHNICAL DATA (according to VDI 2198)

Characteristics	1.1	Manufacturer (abbreviation)		Linde MH	Linde MH	Linde MH
	1.2	**Manufacturer's type designation**		**Xi10**	**Xi12**	**Xi14**
	1.2a	Series		1251-01	1251-01	1251-01
	1.3	Drive		Battery	Battery	Battery
	1.4	Operation		Seated	Seated	Seated
	1.5	Rated capacity/rated load	Q (t)	1.0	1.2	1.4
	1.6	Load centre distance	c (mm)	500	500	500
	1.8	Load distance, centre of drive axle to fork	x (mm)	369.9	369.9	369.9
	1.9	Wheelbase	y (mm)	1156[1)]	1186[1)]	1331[1)]
Weight	2.1	Service weight	kg	2468[2)]	2693[2)]	2737[2)]
	2.2	Axle loading, laden front/rear	kg	3280/388	3291/602	3590/547
	2.3	Axle loading, unladen front/rear	kg	1177/1291[2)]	1211/1.482[2)]	1275/1462[2)]
Tyres/chassis	3.1	Tyres: solid rubber, superelastic, pneumatic, polyurethane		SE	SE	SE
	3.2	Tyre size, front		180/70-8 (18 × 7-8)	180/70-8 (18 × 7-8)	180/70-8 (18 × 7-8)
	3.3	Tyre size, rear		125/75-8 (15 × 4 1/2-8)	125/75-8 (15 × 4 1/2-8)	125/75-8 (15 × 4 1/2-8)
	3.5	Wheels, number front/rear (x = driven wheels)		2 x/2	2 x/2	2 x/2
	3.6	Tread, front	b10 (mm)	930	930	930
	3.7	Tread, rear	b11 (mm)	176	176	176
Dimensions	4.1	Mast/fork carriage tilt, forward/backward	α/β (°)	5.0/6.0	5.0/6.0	5.0/7.0
	4.2	Mast height, lowered	h1 (mm)	2146	2146	2145
	4.3	Free lift	h2 (mm)	150	150	150
	4.4	Lift	h3 (mm)	3050	3050	3050
	4.5	Mast height, extended	h4 (mm)	3657	3657	3656
	4.7	Height of overhead guard (cabin)	h6 (mm)	2057	2056	2055
	4.8	Seat height relating to SIP/stand height	h7 (mm)	1022	1022	1022
	4.12	Coupling height	h10 (mm)	535	535	531
	4.19	Overall length	l1 (mm)	2620	2650	2782
	4.20	Length to fork face	l2 (mm)	1720	1750	1882
	4.21	Overall width	b1/b2 (mm)	1086	1086	1086
	4.22	Fork dimensions DIN ISO 2331	s/e/l (mm)	40/80/900	40/80/900	40/80/900
	4.23	Fork carriage to ISO 2328, class/type A, B		2A	2A	2A
	4.24	Fork carriage width	b3 (mm)	980	980	980
	4.31	Ground clearance, laden, below mast	m1 (mm)	94	93	93
	4.32	Ground clearance, centre of wheelbase	m2 (mm)	101	100	100
	4.34.1	Aisle width for pallets 1000 × 1200 crossways	Ast (mm)	3046[3)]	3076[3)]	3208[3)]
	4.34.2	Aisle width for pallets 800 × 1200 lengthways	Ast (mm)	3170[3)]	3200[3)]	3332[3)]
	4.35	Turning radius	Wa (mm)	1350	1380	1512
	4.36	Inside turning radius	b13 (mm)	0	0	0
Performance	5.1	Travel speed, laden/unladen	km/h	20/20	20/20	20/20
	5.1.1	Travel speed, laden/unladen, backward	km/h	20/20	20/20	20/20
	5.2	Lifting speed, laden/unladen	m/s	0.72/0.75	0.7/0.75	0.66/0.75
	5.3	Lowering speed, laden/unladen	m/s	0.58/0.5	0.58/0.5	0.58/0.5
	5.5	Drawbar pull, laden/unladen	N	4000/4000	4000/4000	4000/4000
	5.6	Max. drawbar pull, laden/unladen	N	12000/12000	12000/12000	12000/12000
	5.7	Gradeability, laden/unladen	%	22.3/33.5	19.9/31.2	18.3/29.9
	5.8	Max. gradeability, laden/unladen	%	37.4/58.6	33.2/53.9	30.4/51.3
	5.9	Acceleration time, laden/unladen	s	4.7/4.3	4.9/4.3	5.0/4.4
	5.10	Service brake		mech./elect.	mech./elect.	mech./elect.
Electric-engine	6.1	Drive motor rating S2 60 min	kW	2x 6.5	2x 6.5	2x 6.5
	6.2	Lift motor rating at S3 15%	kW	13	13	13
	6.3	Battery according to DIN 43531/35/36 A, B, C, no		Li-ION	Li-ION	Li-ION
	6.4	Battery voltage/nominal capacity K5	(V)/(Ah) or kWh	90/189	90/189	90/189
	6.4.a	Battery energy content	kWh	15.3	15.3	15.3
	6.6	Energy consumption according to DIN EN 16796	kWh/h	3.2	3.5	3.6
	6.6.1	CO2 equivalent compliant with DIN EN 16796	kg/h	1.8	1.9	1.9
	6.7	Turnover output according to VDI 2198	t/h	85	101	117
	6.8	Turnover efficiency according to VDI 2198	t/kWh	17.3	19.1	20.5
Drive/lifting mechanism	8.1	Type of drive unit		Microprocessor control	Microprocessor control	Microprocessor control
Additional data	10.1	Operating pressure for attachments	bar	185	170	170
	10.2	Oil flow for attachments	l/min	32	32	32
	10.7	Sound pressure level LpAZ (at the operator's seat)	dB(A)	66	66	66

1) With vertical mast 2) including battery, lines 6.4/6.5. 3) including a = 200 mm safety distance

TECHNICAL DATA (according to VDI 2198)

Characteristics	1.1	Manufacturer (abbreviation)		Linde MH	Linde MH	Linde MH
	1.2	**Manufacturer's type designation**		**Xi16**	**Xi18**	**Xi20**
	1.2a	Series		1251-01	1251-01	1251-01
	1.3	Drive		Battery	Battery	Battery
	1.4	Operation		Seated	Seated	Seated
	1.5	Rated capacity/rated load	Q (t)	1.6	1.8	2.0
	1.6	Load centre distance	c (mm)	500	500	500
	1.8	Load distance, centre of drive axle to fork	x (mm)	369.9	374.9	378.9
	1.9	Wheelbase	y (mm)	1371[1)]	1419[1)]	1459[1)]
Weight	2.1	Service weight	kg	2923[2)]	3206[2)]	3370[2)]
	2.2	Axle loading, laden front/rear	kg	3933/590	4326/680	4675/695
	2.3	Axle loading, unladen front/rear	kg	1318/1605[2)]	1416/1790[2)]	1470/1900[2)]
Tyres/chassis	3.1	Tyres: solid rubber, superelastic, pneumatic, polyurethane		SE	SE	SE
	3.2	Tyre size, front		180/70-8 (18 × 7-8)	200/50-10	200/50-10
	3.3	Tyre size, rear		125/75-8 (15 × 4 1/2-8)	140/55-9	140/55-9
	3.5	Wheels, number front/rear (x = driven wheels)		2 x/2	2 x/2	2 x/2
	3.6	Tread, front	b10 (mm)	930	966	966
	3.7	Tread, rear	b11 (mm)	176	172	172
Dimensions	4.1	Mast/fork carriage tilt, forward/backward	α/β (°)	5.0/7.0	5.0/7.0	5.0/7.0
	4.2	Mast height, lowered	h1 (mm)	2145	2144	2144
	4.3	Free lift	h2 (mm)	150	150	150
	4.4	Lift	h3 (mm)	3050	3050	3050
	4.5	Mast height, extended	h4 (mm)	3656	3655	3655
	4.7	Height of overhead guard (cabin)	h6 (mm)	2054	2053	2053
	4.8	Seat height relating to SIP/stand height	h7 (mm)	1021	1022	1021
	4.12	Coupling height	h10 (mm)	530	531	530
	4.19	Overall length	l1 (mm)	2822	2875	2919
	4.20	Length to fork face	l2 (mm)	1922	1975	2019
	4.21	Overall width	b1/b2 (mm)	1086	1162	1162
	4.22	Fork dimensions DIN ISO 2331	s/e/l (mm)	40/80/900	45/100/900	45/100/900
	4.23	Fork carriage to ISO 2328, class/type A, B		2A	2A	2A
	4.24	Fork carriage width	b3 (mm)	980	980	980
	4.31	Ground clearance, laden, below mast	m1 (mm)	91	95	93
	4.32	Ground clearance, centre of wheelbase	m2 (mm)	99	97	96
	4.34.1	Aisle width for pallets 1000 × 1200 crossways	Ast (mm)	3248[3)]	3300[3)]	3344[3)]
	4.34.2	Aisle width for pallets 800 × 1200 lengthways	Ast (mm)	3372[3)]	3425[3)]	3469[3)]
	4.35	Turning radius	Wa (mm)	1552	1600	1640
	4.36	Inside turning radius	b13 (mm)	0	0	0
Performance	5.1	Travel speed, laden/unladen	km/h	20/20	20/20	20/20
	5.1.1	Travel speed, laden/unladen, backward	km/h	20/20	20/20	20/20
	5.2	Lifting speed, laden/unladen	m/s	0.63/0.75	0.6/0.75	0.57/0.75
	5.3	Lowering speed, laden/unladen	m/s	0.58/0.5	0.58/0.5	0.58/0.5
	5.5	Drawbar pull, laden/unladen	N	4000/4000	4000/4000	4000/4000
	5.6	Max. drawbar pull, laden/unladen	N	12000/12000	12000/12000	12000/12000
	5.7	Gradeability, laden/unladen	%	16.4/27.6	13.2/22.8	13.2/22.8
	5.8	Max. gradeability, laden/unladen	%	27.3/47.0	21.9/38.2	21.9/38.2
	5.9	Acceleration time, laden/unladen	s	5.2/4.5	5.5/4.7	5.5/4.7
	5.10	Service brake		mech./elect.	mech./elect.	mech./elect.
Electric-engine	6.1	Drive motor rating S2 60 min	kW	2x 6.5	2x 6.5	2x 6.5
	6.2	Lift motor rating at S3 15%	kW	13	13	13
	6.3	Battery according to DIN 43531/35/36 A, B, C, no		Li-ION	Li-ION	Li-ION
	6.4	Battery voltage/nominal capacity K5	(V)/(Ah) or kWh	90/189	90/284	90/284
	6.4.a	Battery energy content	kWh	15.3	23.04	23.04
	6.6	Energy consumption according to DIN EN 16796	kWh/h	3.8	4.1	4.3
	6.6.1	CO2 equivalent compliant with DIN EN 16796	kg/h	2.1	2.2	2.3
	6.7	Turnover output according to VDI 2198	t/h	133	148	163
	6.8	Turnover efficiency according to VDI 2198	t/kWh	21.7	22.5	23.3
Drive/lifting mechanism	8.1	Type of drive unit		Microprocessor control	Microprocessor control	Microprocessor control
Additional data	10.1	Operating pressure for attachments	bar	170	170	170
	10.2	Oil flow for attachments	l/min	32	32	32
	10.7	Sound pressure level LpAZ (at the operator's seat)	dB(A)	66	66	66

1) With vertical mast

2) including battery, lines 6.4/6.5.

3) including a = 200 mm safety distance

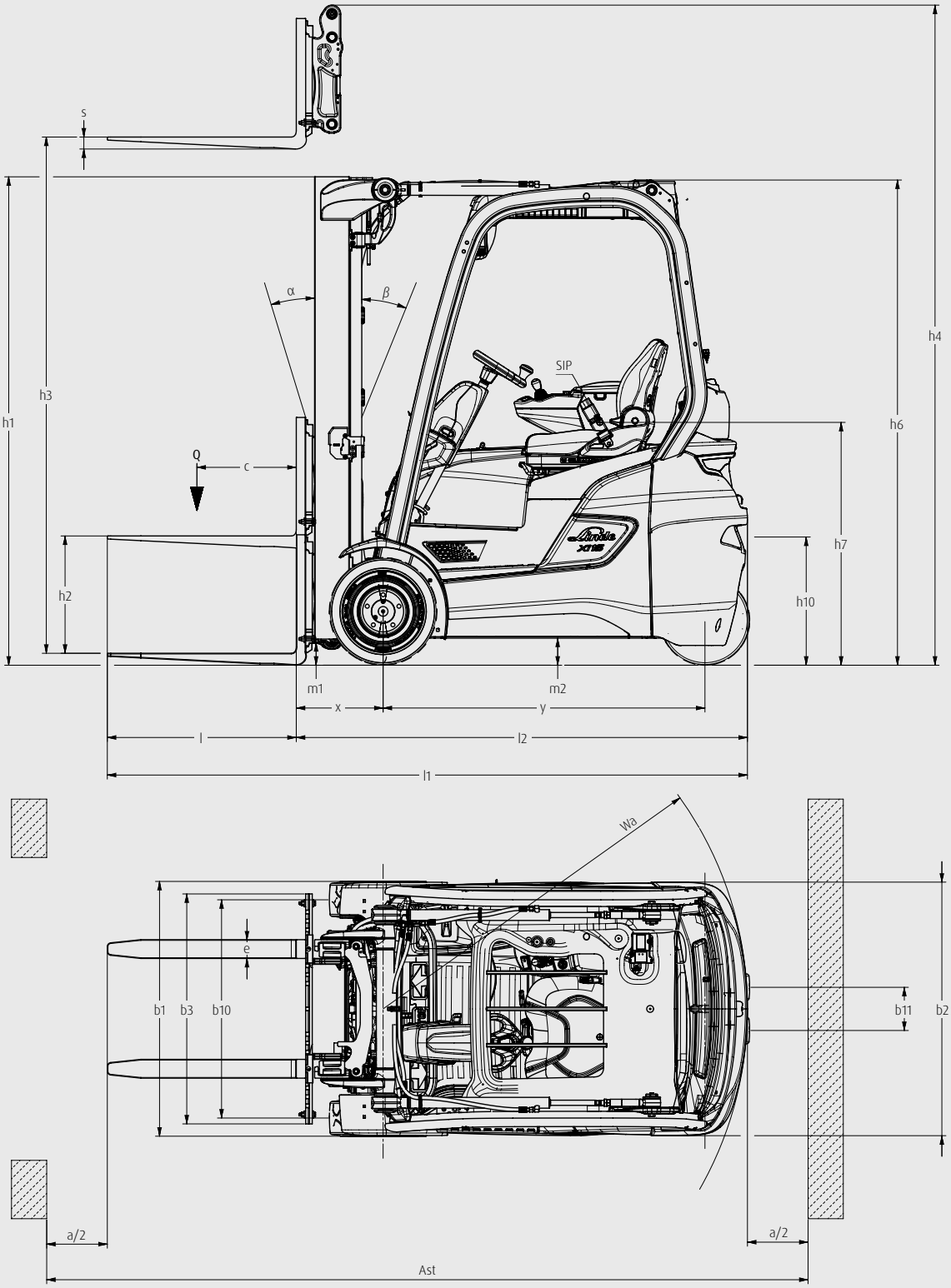
s
α
β
h1
h3
h4
h6
h7
h10
h2
SIP
Q
c
m1
m2
x
y
l
l2
l1
Wa
e
b1
b3
b10
b11
b2
a/2
a/2
Ast

MAST TABLES

STANDARD MAST (in mm)

Series	1521								
Lift	h3: 2800	h3: 2950	h3: 3150	h3: 3250	h3: 3350	h3: 3850	h3: 4250	h3: 4650	h3: 5650
Height measurements	h1: 2025 h2: 150 h4: 3410	h1: 2100 h2: 150 h4: 3560	h1: 2200 h2: 150 h4: 3760	h1: 2250 h2: 150 h4: 3860	h1: 2300 h2: 150 h4: 3960	h1: 2550 h2: 150 h4: 4460	h1: 2750 h2: 150 h4: 4860	h1: 2950 h2: 150 h4: 5260	h1: 3450 h2: 150 h4: 6260
Manufacturer's type designation									
Xi10	○	○	○	○	○	○	○	○	○
Xi12	○	○	○	○	○	○	○	○	○
Xi14	○	○	○	○	○	○	○	○	○
Xi16	○	○	○	○	○	○	○	○	○
Xi18	○	○	○	○	○	○	○	○	○
Xi20	○	○	○	○	○	○	○	○	○

DUPLEX MAST (in mm)

Series	1521						
Lift	h3: 2795	h3: 2945	h3: 3145	h3: 3245	h3: 3345	h3: 3545	h3: 3845
Height measurements	h1: 1945 h2: 1343 h4: 3405	h1: 2020 h2: 1418 h4: 3555	h1: 2120 h2: 1518 h4: 3755	h1: 2170 h2: 1568 h4: 3855	h1: 2220 h2: 1618 h4: 3955	h1: 2320 h2: 1718 h4: 4155	h1: 2470 h2: 1868 h4: 4455
Manufacturer's type designation							
Xi10	○	○	○	○	○	○	○
Xi12	○	○	○	○	○	○	○
Xi14	○	○	○	○	○	○	○
Xi16	○	○	○	○	○	○	○
Xi18	○	○	○	○	○	○	○
Xi20	○	○	○	○	○	○	○

TRIPLEX MAST (in mm)

Series	1521								
Lift	h3: 4100	h3: 4325	h3: 4625	h3: 4775	h3: 4925	h3: 5475	h3: 5625	h3: 6075	h3: 6225
Height measurements	h1: 1953 h2: 1343 h4: 4710	h1: 2028 h2: 1418 h4: 4935	h1: 2128 h2: 1518 h4: 5235	h1: 2178 h2: 1568 h4: 5385	h1: 2228 h2: 1618 h4: 5535	h1: 2478 h2: 1868 h4: 6085	h1: 2528 h2: 1918 h4: 6235	h1: 2678 h2: 2068 h4: 6685	h1: 2728 h2: 2118 h4: 6835
Manufacturer's type designation									
Xi10	○	○	○	○	○	○	○	○	○
Xi12	○	○	○	○	○	○	○	○	○
Xi14	○	○	○	○	○	○	○	○	○
Xi16	○	○	○	○	○	○	○	○	○
Xi18	○	○	○	○	○	○	○	○	○
Xi20	○	○	○	○	○	○	○	○	○

○ Optional equipment

h1: Mast height, lowered **h2:** Free lift **h3:** Lift **h4:** Mast height, extended

LOAD CAPACITY

Xi10

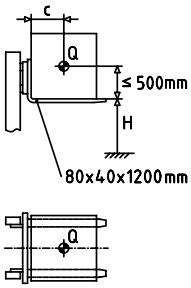

H (mm)	Q (kg)			
6500	850	760	690	630
6300	880	790	710	650
6200	890	800	730	660
6100	910	810	740	670
6000	930	830	750	690
5900	940	840	760	690
5800	950	850	770	700
5700	960	860	780	710
5600	970	870	780	720
5500	980	870	790	720
5400	990	880	800	730
≤ 5300	1000	890	810	740
c (mm)	400-500	600	700	800

Xi12

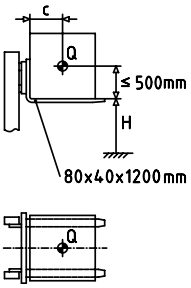

H (mm)	Q (kg)			
6500	920	820	740	680
6300	990	880	800	730
6200	1020	920	830	760
6100	1060	950	860	790
6000	1100	980	890	810
5900	1110	990	900	820
5800	1120	1010	910	830
5700	1140	1020	920	840
5600	1150	1030	940	860
5500	1170	1050	950	870
5400	1180	1060	960	880
≤ 5300	1200	1070	970	890
c (mm)	400-500	600	700	800

Xi14

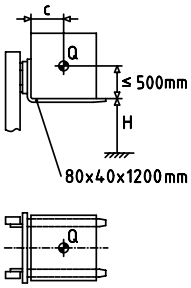

H (mm)	Q (kg)			
6500	950	850	770	700
6300	1030	930	840	770
6200	1080	960	870	800
6100	1120	1000	910	830
6000	1160	1040	950	860
5900	1210	1080	980	900
5800	1250	1120	1020	930
5700	1300	1160	1050	960
5600	1320	1180	1070	980
5500	1350	1210	1090	1000
5400	1370	1230	1110	1020
≤ 5300	1400	1250	1130	1040
c [mm]	400-500	600	700	800

Xi16

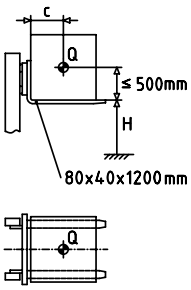

H (mm)	Q (kg)			
6500	1050	940	850	780
6300	1150	1030	930	850
6100	1250	1120	1010	920
6000	1300	1160	1050	960
5900	1350	1210	1090	1000
5800	1400	1250	1130	1040
5700	1450	1300	1170	1070
5600	1500	1340	1210	1110
5500	1520	1360	1230	1130
5400	1550	1390	1260	1150
5300	1570	1410	1280	1170
≤ 5200	1600	1430	1300	1180
c (mm)	400-500	600	700	800

Xi18

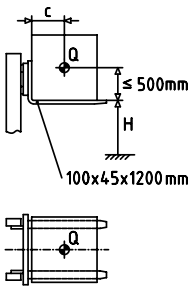

H (mm)	Q (kg)			
6200	1370	1220	1110	1020
6100	1410	1270	1150	1050
6000	1460	1310	1190	1090
5900	1510	1350	1230	1120
5800	1560	1400	1270	1160
5700	1610	1440	1310	1190
5600	1640	1470	1330	1220
5500	1670	1500	1360	1240
5400	1700	1530	1380	1260
5300	1730	1550	1410	1290
5200	1760	1580	1430	1310
≤ 5100	1800	1610	1460	1340
c (mm)	400-500	600	700	800

Xi20

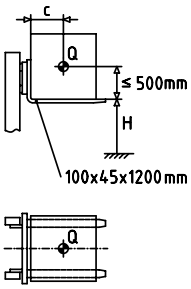

H (mm)	Q (kg)			
6200	1500	1340	1220	1110
6000	1590	1430	1300	1190
5800	1690	1520	1370	1260
5600	1790	1600	1450	1330
5500	1810	1630	1470	1350
5400	1840	1650	1500	1370
5300	1860	1670	1520	1390
5200	1890	1700	1540	1410
5100	1920	1720	1560	1430
5000	1940	1740	1580	1450
4900	1970	1770	1600	1470
≤ 4800	2000	1790	1620	1490
c (mm)	400-500	600	700	800

H = Lifting height, c = Load centre distance, Q = Load capacity
Load capacity for standard mast and fork carriage

STANDARD AND OPTIONAL EQUIPMENT

	Manufacturer's type designation/equipment	Xi10 – Xi20
Safety	Linde Curve Assist – automatic reduction of travel speed around corners	●
	Electric seat belt monitoring – visual and audible feedback	●
	Linde Load Assist – increased safety at high lift heights	●
	BlueSpot and TruckSpot – visual drive path warning for pedestrians and other operators	○
	Load weight indicator	○
	Linde Safety Pilot – load-dependent driving and lifting speed regulation plus additional functions	○
	Linde Safety Guard – visual and audible proximity warning between trucks or between trucks and pedestrians	○
	Speed restriction options (via switch, indoor/outdoor, load-dependent)	○
	Electrically monitored restraint system (optional monitoring: Door and/or belt)	○
	Linde LED stripes – optimum illumination of travel direction (switched or automatic) for increased safety	○
	Linde Vertilight – extensive illumination of racking, load and forks	○
	Reverse Assist Radar – rear collision avoidance	○
	Reverse Assist Camera – personnel detection camera system avoids accidents	○
Digitalisation	Online data transmission	●
	WiFi data transmission	○
	Linde Fleet Management (local and cloud-based fleet management with different functional modules)	○
	Linde Pre-Op Check – customizable daily check protocol for operational readiness, integrated in the truck display	○
	Truck Call app – coordination of transport jobs	○
Operation/ load handling	Twin pedal control – smooth acceleration and quick direction changes	●
	Single pedal control – smooth acceleration and change of travel direction via switch	○
	Linde Load Control – central control lever fully integrated into the armrest for precise control of all hydraulic functions	●
	Multifunction lever – effortless control and increased ease of use	○
	Individual lever control of hydraulic functions	○
Workplace	Innovative decoupling concept decreases whole body vibrations to reduce operator fatigue	●
	Ergonomic and safe on/off access for operator	●
	Adjustable steering column tilt	●
	Comfort overhead guard for optimum headroom	●
	Operator's seat – fast, easy mechanical weight adjustment	●
	Different operator's seat options: seat heating, air suspension, active seat cushion ventilation, fore/aft suspension	○
	Operator's seat – swivelling seat	○
	3.5" LED colour display, including steering and tilt angle display	●
	7" LED multifunction colour display integrates additional functions such as cameras, Linde Safety Pilot and Pre-Op Check	○
	Armoured glass roof window	○
	Light metal doors with wide-opening sliding window	○
	Illuminated DIN A4 clip board	○
	Electric heating – 4 heat settings and 7 air nozzles for targeted adjustment as required	○
	Fully into the contour integrated air conditioning – use of existing air nozzles from the heating system for efficient cooling	○
	Radio incl. DAB+, MP3 player and Bluetooth hands-free kit	○
Mast	High mounted tilt cylinders with maintenance-free bearings increase capacity at height	●
	Optimum visibility due to nested mast profiles on standard, duplex and triplex masts	●
	Electronically damped tilt stop	●
	Load damping for increased driving comfort and reduced wear and tear	○
Attachments/ forks	Reinforced Linde forks – easy to adjust and offering long service life	○
	Integral roller-guided side shift carriage retains full truck capacity	○
	Integral fork positioning carriage 'VIEW' for optimum residual load capacity and exceptional visibility	○
Axles and tyres	Three-wheel close-coupled steer axle for high level of manoeuvrability	●
	Super-elastic tyres (SE)	●
	Closed shoulder CS 20 tyres	○
	Anti-static or non-marking tyres	○
	Dirt deflectors/mud guards, front and rear	○
Drive and brake system	90 volt twin motor front-wheel drive with traction control and ramp assist	●
	Synchronous reluctance motors (SRM) for traction and lifting functions	●
	Operating settings – economy, efficiency and performance – for individual performance adjustment	●
	Automatic parking brake	●
Energy	Simple, convenient charging thanks to rear charging option	●
	Charge anywhere with fully integrated, high frequency (HF) on-board charger	○
	Fully integrated 90 volt Li-ION battery	●

● Standard equipment ○ Optional equipment

CHARACTERISTICS

Workplace

Ergonomics

- → Operator's workstation isolated from road shocks and vibrations by elastomer ring bearings to reduce vibration and fatigue for the operator
- → Intuitive operation thanks to twin pedal control and Linde Load Control
- → Spacious cabin with 3.5 inch display showing the most important truck information
- → Wide range of ergonomic comfort seats for optimum seating position
- → Fully integrated air conditioning and heating systems for optimum working comfort
- → Low step-in and spacious cab with plenty of head and legroom
- → Optional operating concept Linde Steer Control with joystick or mini wheel

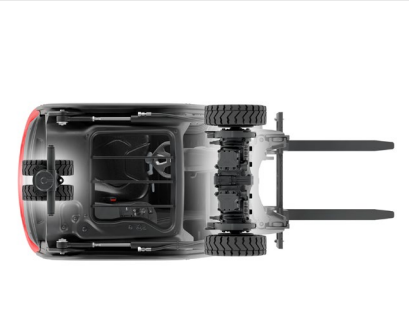

Bird's eye view x-ray

Handling

- → Lifting and lowering speeds up to 20 percent above industry standard
- → Three-wheel design provides the highest level of manoeuvrability in tight spaces
- → Maximum speed of up to 20 km/h for fast product transfers
- → Optional on-board charger provides flexible opportunity charging
- → 90 volt technology ensures consistently high performance, even in multi-shift operations

Panoramic view

Safety

- → Low vehicle centre of gravity ensures optimum resistance to tipping enhancing safety
- → Overhead tilt cylinders for precise load handling at high lift heights
- → Optimised visibility due to nested mast profiles and narrow A-pillars
- → Linde Curve Assist for automatic travel speed reduction around corners
- → Linde Load Assist for increased safety at high lift heights
- → Automatic parking brake holds the truck securely on ramps and gradients
- → Numerous optional assistance systems for additional protection

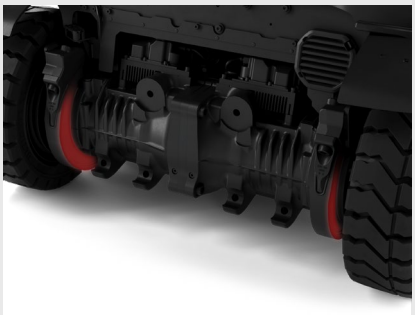

Drive axle

Service

- → Robust, low-wear design of all components
- → Maintenance-free, fully enclosed drive components
- → Long maintenance intervals e.g hydraulic oil and filter change only every 6000 hours
- → Easily accessible components lead to fast, efficient maintenance
- → Remote diagnostics and predictive maintenance through data analysis reduce downtime

Presented by:

Subject to modification in the interest of progress. Illustrations and technical specifications could include options and are not binding for actual constructions. All dimensions subject to usual tolerances.

Linde Material Handling

Linde Material Handling GmbH
Carl-von-Linde-Platz | 63743 Aschaffenburg | Germany
Phone + 49 6021 99 0 | Fax + 49 6021 99 1570
www.linde-mh.com | info@linde-mh.com

DS_Xi10-Xi20_1251_en_A_1024